RuggedNet® 10GMGPoEBT/Si

Unmanaged Multi-Gigabit/Multi-Rate 60/100W PoE 10Gigabit Ethernet Switch

User Manual

38 Tesla, Irvine, CA 92618 USA
Phone: (949) 250-6510; Fax: (949) 250-6514

General and Copyright Notice

This publication is protected by U.S. and international copyright laws. All rights reserved. The whole or any part of this publication may not be reproduced, stored in a retrieval system, translated, transcribed, or transmitted, in any form, or by any means, manual, electric, electronic, electromagnetic, mechanical, chemical, optical or otherwise, without prior explicit written permission of Omnitron Systems Technology, Inc.

The following trademarks are owned by Omnitron Systems Technology, Inc.: FlexPoint©, FlexSwitch™, iConverter®, miConverter©, NetOutlook®, OmniLight®, OmniConverter®, RuggedNet®, Omnitron Systems Technology, Inc.™, OST™ and the Omnitron logo.

All other company or product names may be trademarks of their respective owners.

The information contained in this publication is subject to change without notice. Omnitron Systems Technology, Inc. is not responsible for any inadvertent errors.

Warranty

This product is warranted to the original purchaser (Buyer) against defects in material and workmanship for a period of two (2) years from the date of shipment. A five (5) year warranty may be obtained by the original purchaser by registering this product at www.omnitron-systems.com/support within ninety (90) days from the date of shipment. During the warranty period, Omnitron will, at its option, repair or replace a product which is proven to be defective with the same product or with a product with at least the same functionality.

For warranty service, the product must be sent to an Omnitron designated facility, at Buyer's expense. Omnitron will pay the shipping charge to return the product to Buyer's designated US address using Omnitron's standard shipping method.

Limitation of Warranty

The foregoing warranty shall not apply to product malfunctions resulting from improper or inadequate use and/or maintenance of the equipment by Buyer, Buyer-supplied equipment, Buyer-supplied interfacing, unauthorized modifications or tampering with equipment (including removal of equipment cover by personnel not specifically authorized and certified by Omnitron), or misuse, or operating outside the environmental specification of the product (including but not limited to voltage, ambient temperature, radiation, unusual dust, etc.), or improper site preparation or maintenance.

No other warranty is expressed or implied. Omnitron specifically disclaims the implied warranties of merchantability and fitness for any particular purpose.

The remedies provided herein are the Buyer's sole and exclusive remedies. Omnitron shall not be liable for any direct, indirect, special, incidental, or consequential damages, whether based on contract, tort, or any legal theory.

Environmental Notices

The equipment covered by this manual must be disposed of or recycled in accordance with the Waste Electrical and Electronic Equipment Directive (WEEE Directive) of the European Community directive 2012/19/EU on waste electrical and electronic equipment (WEEE) which, together with the RoHS Directive 2015/863/EU, for electrical and electronic equipment sold in the EU after July 2019. Such disposal must follow national legislation for IT and Telecommunication equipment in accordance with the WEEE directive: (a) Do not dispose waste equipment with unsorted municipal and household waste. (b) Collect equipment waste separately. (c) Return equipment using collection method agreed with Omnitron.

The equipment is marked with the WEEE symbol shown to indicate that it must be collected separately from other types of waste. In case of small items the symbol may be printed only on the packaging or in the user manual. If you have questions regarding the correct disposal of equipment go to www.omniton-systems.com/support or e-mail to Omnitron at intlinfo@omnitron-systems.com.

Safety Warnings and Cautions

ATTENTION: Observe precautions for handling electrostatic discharge sensitive devices.

WARNING: Potential damage to equipment and personal injury.

WARNING: Risk of electrical shock.

WARNING: Hot surface.

RuggedNet 10GMGPoEBT/Si
User Manual

Product Overview

The RuggedNet 10GMGPoEBT/Si are unmanaged multi-gigabit Ethernet switches featuring one 1/10G SFP/SFP+ or multi-gigabit/multi-rate RJ-45 uplink port with two multi-gigabit/multi-rate RJ-45 Power-over-Ethernet and two 10/100/1000 RJ-45 Power-over-Ethernet downlink/access ports.

The 10GMGPoEBT/Si supports IEEE 802.3bt (60 and 100W) per user port depending on the model and supports frame sizes up to 10,240 bytes.

The module functions can be configured using easily accessible DIP-switches.

Front Panel

The front of the module provides access to the RJ-45 PoE and uplink ports.

RJ-45 PoE and Uplinks Ports

The module has two RJ-45 PoE multi-gigabit/multi-rate ports and two RJ-45 PoE 10/100/1000 ports. The multi-gigabit/multi-rate ports support speeds of 100Mbps, 1Gbps, 2.5Gbps, 5Gbps and 10Gbps.

Models are available with an RJ-45 or SFP/SFP+ uplink port.

The SFP/SFP+ transceiver receptacle port supports a variety of copper and fiber transceivers. It supports 10/100/1000BASE-T, 1000BASE-T, 100M/1G/2.5G/5G/10GBASE-T multi-gigabit copper transceivers and 1G and 10G multimode or single-mode fiber, dual or single-fiber transceivers in standard, CWDM and DWDM wavelengths.

The RJ-45 uplink port is a multi-gigabit/multi-rate supporting speeds of 100Mbps, 1Gbps, 2.5Gbps, 5Gbps and 10Gbps.

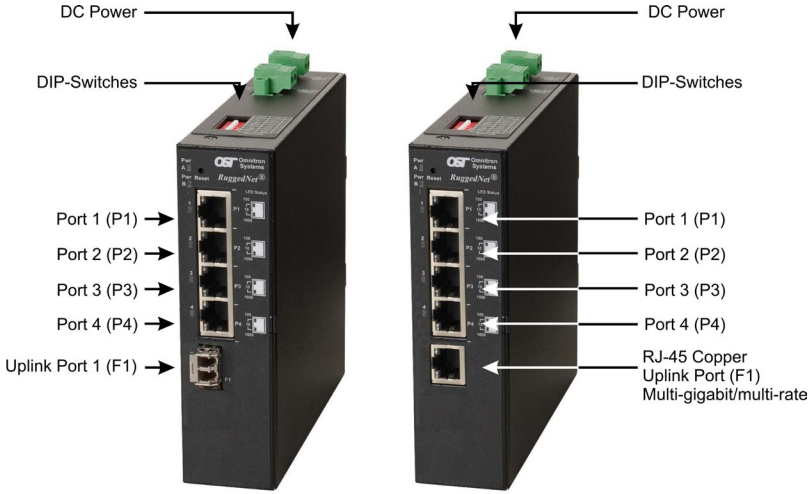

Port 1 and 2: 10/100/1000
Port 3 and 4: Multi-gigabit/multi-rate

Installation Procedure

1) Configure DIP-switches

2) Installing the Module

3) Apply DC Power

4) Connect Cables

5) Verify Operation

1) Configure DIP-switches

DIP-switches are located on the top of the module. The DIP-switches are used to configure modes of operation and networking features.

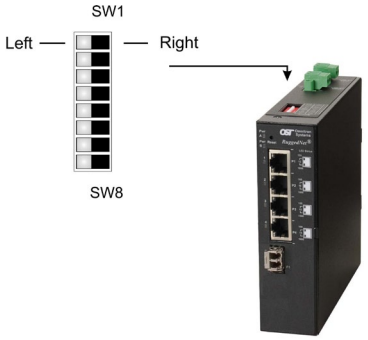

The table below provides a description of each DIP-switch position and function.

Switch	Position	Legend	Function
SW1	LEFT	Normal	Normal Switch Mode is Enabled (factory default)
	RIGHT	Directed Switch	Directed Switch Mode (aka camera mode) is Enabled
SW2	LEFT	Off	PoE Reset is Disabled (factory default)
	RIGHT	PoE Reset	PoE Reset is Enabled on all ports.
SW3	LEFT	On	PoE Power is Enabled (factory default)
	RIGHT	PoE Disabled	PoE Power is Disabled
SW4	LEFT	Off	PoE Forced Mode
	RIGHT	On	
SW5	LEFT	Off	
	RIGHT	On	
SW6	LEFT	On	MAC Learning Enabled (factory default)
	RIGHT	MAC Learning	MAC Learning Disabled
SW7	LEFT	Off	Pause Disabled (factory default)
	RIGHT	Pause	Pause Enabled
SW8	LEFT	L2CP Tunnel	L2CP Tunnel (factory default)
	RIGHT	Discard	L2CP Tunnel Discard

SW1: Switch Mode - “Normal/Directed Switch”

The module supports Normal or Directed Switch Mode.

The modes are described with MAC learning enabled. When MAC learning is disabled, unicast packets are forwarded to all ports.

Switch Mode

When SW1 is in the factory default LEFT “Normal” position, the module operates as a standard layer 2 switch. Data flow will follow MAC address mapping.

Directed Switch Mode (AKA Camera Mode)

When SW1 is in the RIGHT “Directed Switch” position, the module is configured for Directed Switch Mode. In this mode of operation, traffic from all the RJ-45 user ports is only forwarded to the uplink port F1, preventing the broadcast traffic from flooding other network ports.

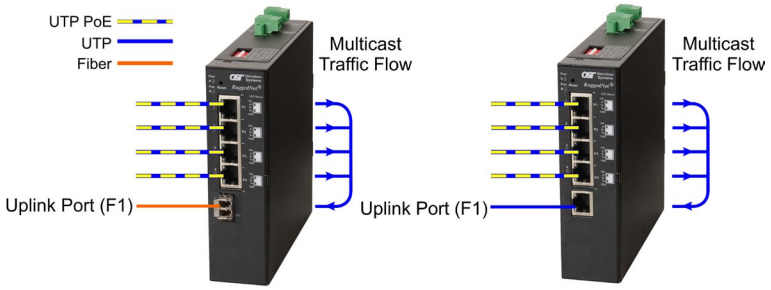

SW2: PSE Reset - “Off/PoE Reset”

The module can be configured to disable (reset) the PoE output power for 5 seconds after a loss of receive link on the uplink port. PoE output power will be disabled on all ports. This feature is typically used to allow a PD to re-initialize after a failure on the incoming uplink.

When this DIP-switch is in the LEFT “Off” position (factory default), PoE output power does not reset on a loss of receive link on the uplink port. When this DIP-switch is in the RIGHT “PoE Reset” position, the module will disable PoE output power on all PoE ports for 5 seconds following a loss of receive link on any uplink port.

SW3: PoE Power - “On/PoE Disabled)

When this DIP-switch is in the LEFT “On” position (factory default), all the PoE ports are enabled with PoE PSE functionality. When this DIP-switch is in the RIGHT “PoE Disabled” position, all the PoE ports are disabled with PoE PSE functionality.

SW4 and SW5: PoE Forced - “Disabled/Enabled”

These DIP-switches configure the PoE ports for normal or forced mode per the table below.

60 Watt Models		
SW4	**SW5**	**Function**
LEFT	LEFT	Normal 802.3bt mode on all ports, classes 0-6, limitation per class negotiation
LEFT	RIGHT	Normal 802.3bt mode on ports P1 and P2 (class 0-6, limitation per class negotiation) Forced 802.3bt mode, on ports P3 and P4 (class 0-8, limited to 60W independent of class negotiation)
RIGHT	LEFT	Forced 802.3bt mode on ports P1 and P2 (class 0-8, limited to 60W independent of class negotiation) Normal 802.3bt mode on ports P3 and P4 (class 0-6, limitation per class negotiation)
RIGHT	RIGHT	Forced 802.3bt mode on all port, (class 0-8, limited to 60W independent of class negotiation)

100 Watt Models		
SW4	**SW5**	**Function**
LEFT	LEFT	Normal 802.3bt mode on all port, classes 0-8, limitation per class negotiation
LEFT	RIGHT	Normal 802.3bt mode on ports P1 and P2 (class 0-8, limitation per class negotiation) Forced 802.3bt mode, on ports P3 and P4 (class 0-8, limited to 100W independent of class negotiation)
RIGHT	LEFT	Forced 802.3bt mode on ports P1 and P2 (class 0-8, limited to 100W independent of class negotiation) Normal 802.3bt mode on ports P3 and P4 (class 0-8, limitation per class negotiation)
RIGHT	RIGHT	Forced 802.3bt mode on all ports, (class 0-8, limited to 100W independent of class negotiation)

SW6: MAC Learning - “On/MAC Learning”

When this DIP-switch is in the LEFT “On” position (factory default), all ports on the module will learn the source MAC address of each received packet and store the address so packets destined for the stored addresses can be forwarded to the appropriate port on the module. When the DIP-switch is in the RIGHT “MAC Learning” position, learning is turned off and all received unicast packets are forwarded to all ports.

SW7: Pause - “Off/Pause”

Setting the DIP-switch to the LEFT “Off” position (factory default) configures the module to advertise no Pause capability on all ports. Setting this DIP-switch to the RIGHT “Pause” position configures the module to advertise Symmetrical and Asymmetrical Pause capability to all ports.

SW8: L2CP - “L2CP Tunnel/Discard”

When this DIP-switch is in the LEFT “L2CP Tunnel” position (factory default), all L2CP frames will be tunneled through the module. When this DIP-switch is in the RIGHT “Discard” position, all L2CP frames will be discarded with the exception of the frames listed below.

Multicast Destination Address	Name	SW8 L2CP LEFT or RIGHT
01-80-C2-00-00-00	Bridge Group Address	Tunnel
01-80-C2-00-00-01	IEEE Std 802.3 Full Duplex PAUSE	Based on PAUSE
01-80-C2-00-00-0B	Reserved for future standardization	Tunnel
01-80-C2-00-00-0C	Reserved for future standardization	Tunnel
01-80-C2-00-00-0D	Provider Bridge GVRP Address	Tunnel
01-80-C2-00-00-0F	Reserved for future standardization	Tunnel
01-80-C2-00-00-10	All Bridges	Tunnel
01-80-C2-00-00-2X	GARP	Tunnel
01-80-C2-00-00-3X	802.1ag CFM	Tunnel

If SW7 is in the LEFT “Off” position, all PAUSE frames are TUNNELED. If SW7 is in the RIGHT “Pause” position, the module is participating in the PAUSE function.

2) Installing the Module

The module can be wall or rack mounted using the optional Wall Mount Plate (8260-3) or DIN-Rail mounted.

Wall Mounting

Refer to the Wall Mount Plate user manual (040-08260-301x) for the proper installation guidelines.

The wall mounting height of the module should be less than or equal to 2 meters (6.6 feet) from the floor. Use the four mounting holes on the module to secure the module to the wall. The module can accommodate #6 screws (not included).

Installation of the module should be such that the air flow in the front, back, side and top vents of the switch are not compromised or restricted.

The accessory cables should have their own strain relief and do not pull down on the module.

Rack Mounting

The module can be rack mounted using the optional Rack Mount Shelf (8260-0). Refer to the Rack Mount Shelf user manual (040-08260-001x) for the proper installation guidelines.

Follow the same guidelines above when rack mounting the module.

DIN-Rail Mounting

The module can be DIN-Rail mounted using the attached DIN-Rail mounting bracket.

3) Apply DC Power

This module is intended for installation in restricted access areas. ("Les matériels sont destinés à être installés dans des EMPLACEMENTS À ACCÈS RESTREINT"). A restricted access area can be accessed only through the use of a special key, or other means of security.

The over current protection for connection with centralized DC shall be provided in the building installation, and shall be a UL listed circuit breaker rated 20 Amps, and installed per the National Electrical Code, ANSI/NFPA-70.

The 60 watt 10GMGPoEBT/Si requires +46 to +57VDC (4.49A @ 56VDC max rated power) and the 100 watt 10GMGPoEBT/Si requires +46 to +57VDC (7.38A @ 56VDC max rated power).

Appropriate overloading protection should be provided on the DC power source outlets utilized.

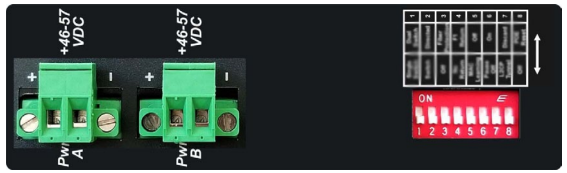

WARNING: Only a DC power source that complies with safety extra low voltage (SELV) requirements can be connected to the DC-input power supply.

WARNING REGARDING EARTHING GROUND:

- This equipment shall be connected to the DC supply system earthing electrode conductor or to a bonding jumper from an earthing terminal bar or bus to which the DC supply system earthing electrode is connected.
- This equipment shall be located in the same immediate area (such as adjacent cabinets) as any other equipment that has a connection between the earthed conductor of the same DC supply circuit and the earthing conductor, and also the point of earthing of the DC system. The DC system shall not be earthed elsewhere.
- The DC supply source is to be located within the same premises as this equipment.
- There shall be no switching or disconnecting devices in the earthed circuit conductor between the DC source and the earthing electrode conductor.

Locate the DC circuit breaker of the external power source, and switch the circuit breaker to the OFF position.

Prepare a power cable using a three conductor insulated wire (not supplied) with 12AWG to 14AWG thickness. Cut the power cable to the length required.

Strip approximately 3/8 of an inch of insulation from the power cable wires.

Connect the ground wire to the grounding screws on the back of the module.

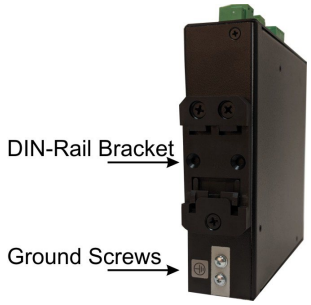

Connect the power cables to the module by fastening the stripped ends to the DC power connector.

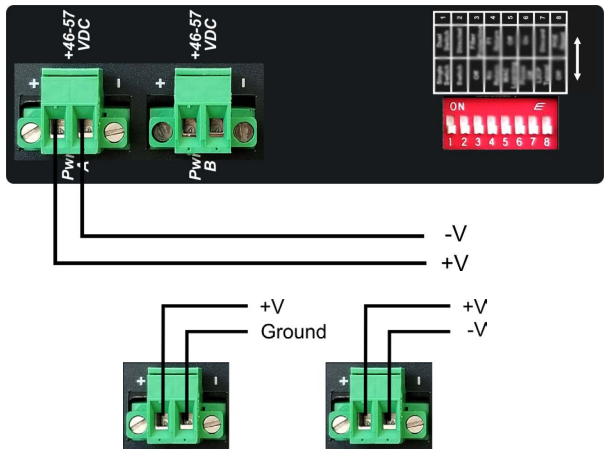

WARNING: The positive lead of the power source must be connected to the "+" terminal on the module and the negative lead of the power source to the "-" terminal on the module as shown above.

WARNING: Note the wire colors used in making the positive, negative and ground connections. Use the same color assignment for the connection at the circuit breaker.

Connect the power wires to the circuit breaker and switch the circuit breaker ON. If any modules are installed, the Power LED(s) will indicate the presence of power.

During the installation, ensure that the ground potentials are maintained throughout the system connections. This includes but not limited to the power source ground and any shielded cabling grounds.

WARNING!!!

NEVER ATTEMPT TO OPEN THE CHASSIS OR SERVICE THE POWER SUPPLY. OPENING THE CHASSIS MAY CAUSE SERIOUS INJURY OR DEATH. THERE ARE NO USER REPLACEABLE OR SERVICEABLE PARTS IN THIS UNIT.

Make sure to disconnect both power connectors and the ground cables before removing the equipment.

4) Connect Cables

a. Insert the appropriate fiber or copper transceiver into the SFP receptacle on the front of the module (see the SFP Data Sheet 091-17000-001 for supported Gigabit transceivers or 091-17400-001 for supported 10G transceivers).

NOTE: The release latch of the SFP fiber transceiver must be in the closed (up) position before insertion.

b. Connect the appropriate cable type depending on the installed SFP/SFP+ transceiver.

For fiber transceivers,it is important to ensure that the transmit (TX) is attached to the receive side of the transceiver at the other end and the receive (RX) is attached to the transmit side. When using single-fiber (SF) models, the TX wavelength must match the RX wavelength at the other end and the RX wavelength must match the TX wavelength at the other end.

c. Connect the RJ-45 ports using an Ethernet Category 5 or better cable to the external Ethernet device.

Description	15W IEEE 802.3af PoE	30W IEEE 802.3at PoE+	60W IEEE 802.3.bt PoE (Type 3)	100W IEEE 802.3bt PoE (Type 4)
Power Supply Voltage Range	46.0 to 57.0 VDC	51.0 to 57.0 VDC	51.0 to 57.0 VDC	53.0 to 57.0 VDC
Voltage Range at PSE port Output	44.0 to 56.0 VDC	50.0 to 56.0 VDC	50.0 to 56.0 VDC	52.0 to 56.0 VDC
Maximum Power from PoE/PSE port	15.4 watts	30 watts	60 watts	100 watts
Minimum Voltage at PoE/PD port input*	37.0 VDC	42.5 VDC	42.5 VDC	41.1 VDC
Minimum Power at PoE/PD port*	12.95 watts	25.5 watts	51 watts	71 watts
* at 100 meters using Cat5				

4) Verify Operation

Verify the module is operational by viewing the LED indicators.

Power LED Indicators		
Legend	**Indicator**	**Description**
Pwr A	OFF	Power not being supplied by Power Supply A
	Green - ON	Power being supplied by the single power supply or Power Supply A
	Green Blinking 1 Hz	Power being supplied by the single power supply or Power Supply A
Pwr B	OFF	Power not being supplied by Power Supply B
	Green - ON	Power being supplied by Power Supply B
	Green Blinking 1 Hz	Power being supplied by Power Supply B

Uplink LED Indicators (SFP/SFP+ or RJ-45)		
Legend	**Indicator**	**Description**
Link	OFF	Port not linked
	Green - ON	Port linked at the speed indicated by the Rate LED
	Green - Blinking at 10Hz	Port is linked and transmitting or receiving data
Rate	OFF	Port not linked
	Green - single blink	Port linked at 100M or 1G
	Green - two blinks	Port linked at 2.5G
	Green - three blinks	Port linked at 5G
	Green - four blinks	Port linked at 10G

Multi-Gigabit/Multi-Rate RJ-45 Port LED Indicators		
Legend	**Indicator**	**Description**
Link	OFF	Port not linked
	Green - ON	Port linked at the speed indicated by the Rate LED
	Green - Blinking at 10Hz	Port is linked and transmitting or receiving data
Rate	OFF	Port not linked
	Green - single blink	Port linked at 100M or 1G
	Green - two blinks	Port linked at 2.5G
	Green - three blinks	Port linked at 5G
	Green - four blinks	Port linked at 10G
PSE (Status)	OFF	Port PSE inactive or disabled
	Amber - Solid	Failed PoE negotiation
	Amber - Blinking at 1Hz	Cannot provide requested current (power)
	Green - single blink	Powered by 802.3bt PoE (4 - 19W, Classes 0 - 3)
	Green - two blinks	Powered by 802.3bt PoE+ (30W, Class 4)
	Green - three blinks	Powered by 802.3bt 4PPoE (45W, 60W), class 5 & 6
	Green - four blinks	Powered by 802.3bt 4PPoE (75W, 100W), class 7 & 8

10/100/1000 RJ-45 Port LED Indicators		
Legend	**Indicator**	**Description**
Link	OFF	Port not linked
	Green - ON	Port linked at the speed indicated by the Rate LED
	Green - Blinking at 10Hz	Port is linked and transmitting or receiving data
Rate	OFF	Port not linked
	Green - single blink	Port linked at 10M
	Green - two blinks	Port linked at 100M
	Green - three blinks	Port linked at 1G
PSE (Status)	OFF	Port PSE inactive or disabled
	Amber - Solid	Failed PoE negotiation
	Amber - Blinking at 1Hz	Cannot provide requested current (power)
	Green - single blink	Powered by 802.3bt PoE (4 - 19W, Classes 0 - 3)
	Green - two blinks	Powered by 802.3bt PoE+ (30W, Class 4)
	Green - three blinks	Powered by 802.3bt 4PPoE (45W, 60W), class 5 & 6
	Green - four blinks	Powered by 802.3bt 4PPoE (75W, 100W), class 7 & 8

Specifications

Description	**RuggedNet® 10GMGPoEBT/Si** Unmanaged Industrial IEEE 802.3bt 10Gigabit Multi-Gigabit/Multi-Rate Ethernet Switch	
Standard Compliances	IEEE 802.3, 802.3bz, IEEE 802.3af (15.4 watts max), IEEE 802.3at (30 watts max) IEEE 802.3bt (60 watts or 100 watts max)	
Environmental	REACH, RoHS and WEEE	
PoE Mode	IEEE Alternate A (Alt A)	
Frame Size	Up to 10,240 bytes	
Port Types	**Copper:** 100/1000BASE-T/2.5GBASE-T/5GBASE-T/10GBASE-T (RJ-45) 10/100/1000BASE-T (RJ-45) **SFP/SFP+:** 10GBASE-X Fiber Transceivers, 10GBASE-T Copper Transceivers 1000BASE-X Fiber Transceivers, 1000BASE-T Copper Transceivers 10/100/1000BASE-T SGMII Copper Transceivers 100/1000/2.5G/5G/10GBASE-T Multi-rate Copper Transceivers	
Cable Types	**Copper:** Twisted-pair cable up to 100 meters 10BASE-T: 4-pair UTP Cat 3, 4, 5, 5e, 6, 6A 100BASE-TX: 4-pair UTP Cat 5, 5e, 6, 6A 1G/2.5G: 4-pair UTP Cat 5e, 6, 6A, 7 5G: 4-pair UTP Cat 6, 6A, 7 10G: 4-pair UTP Cat 6A, 7 **Fiber:** Multimode: 50/125, 62.5/125µm Single-mode: 9/125µm	
DC Power Requirements	60 watt Models: +46 to +57VDC; 4.49A @ 56VDC 2 Pin Terminal (isolated)	100 watt Models: +46 to +57VDC; 7.38A @ 56VDC 2 Pin Terminal (isolated)
Dimensions (W x D x H)	1.5” x 5.5” x 5.5” (38.1 mm x 139.7 mm x 139.7 mm)	
Weight	1.5 lbs. (680 grams)	
Operating Temperature	Extended: -40 to 75°C Storage: -40 to 80°C	
Humidity	5 to 95% (non-condensing)	
Altitude	-100m to 4,000m (operational)	
MTBF (hours)	247,000	
Warranty	5 year product warranty with 24/7/365 free Technical Support	

Regulatory Compliances **(Pending)**	Safety:	UL 62368-1, UL 60950-1, IEC 62368-1, IEC 60950-1, EN 62368-1, EN 60950-1, CAN/CSA C22.2 No. 62368-1-14, CAN/CSA C22.2 No. 60950-1, CE Mark, UKCA
	EMC:	EN 55032/24 CE Emissions/Immunity, IEC 61000-6-4 Industrial Emissions, IEC 61000-6-2 Industrial Immunity
	EMI:	CISPR 32, FCC 47 Part 15 Subpart B Class A
	EMS:	IEC 61000-4-2 ESD: Contact: 6 kV; Air: 8 kV, IEC 61000-4-3 RS: 80 MHz to 1 GHz: 10 V/m (on UTP cabling) and 20 V/m (on STP cabling) IEC 61000-4-4 EFT: Power: 2 kV; Signal: 1 kV, IEC 61000-4-5 Surge: Power: 2 kV; Signal: 2 kV, IEC 61000-4-6 CS: Signal: 10 V, IEC 61000-4-8 (Magnetic Field), 30A/m, IEC 61000-4-11 (General Immunity in Industrial Environments)
	IP Rating:	IP40 Protection
	ACT:	TAA, BAA, NDAA

Customer Support Information

If you encounter problems while installing this product, contact Omnitron Technical Support:

Phone: (949) 250-6510

Fax: (949) 250-6514

Address: Omnitron Systems Technology, Inc.
38 Tesla
Irvine, CA 92618, USA

Email: support@omnitron-systems.com

URL: www.omnitron-systems.com

040-09662-001B 11/24